TDOT Transition to OpenRoads Designer CONNECT Edition

ASHE MIDDLE TENNESSEE CHAPTER

David Morse, PE – WSP

October 14, 2020

Agenda

- History of TDOT Design Software
- WHY is TDOT moving to ORD CONNECT Edition?
- WHAT does CONNECT mean?
- WHAT is Changing?
- Future Deliverables
- Training Materials
- Bentley Licensing
- Implementation Timeline
- Existing Projects – SS2 or ORD?
- TDOT ORD Website/Support
- Questions

History of TDOT Design Software

- Microstation J
- Microstation V8
- Microstation V8i / PowerGEOPAK SS2
- Microstation V8i / PowerGEOPAK SS4
  - Skipped
- OpenRoads Designer (ORD) CONNECT Edition

TN TDOT Department of Transportation

wsp

WHY is TDOT moving to ORD CONNECT Edition?

- Bentley has stopped support of SS2 products

SUPPORT STATUS	CONTINUOUS SUPPORT	FULL SUPPORT	EXPIRING SUPPORT	SUPPORT DISCONTINUED
CONNECT Edition	■			
V8*i* SELECTseries 10 Refer to *V8i* SELECTseries 10 Applications		■	As of January 1, 2021	As of January 1, 2022
V8*i* (Earlier SELECTseries)			■	As of January 1, 2021
V8, XM, 2004, ...				■

https://www.bentley.com/en/desktop-applications

- Industry is moving forward nationally, with or without us

WHY is TDOT moving to ORD CONNECT Edition?

- Enables the use of digital data (models) throughout the life of a project that are both geometrically and geospatially correct

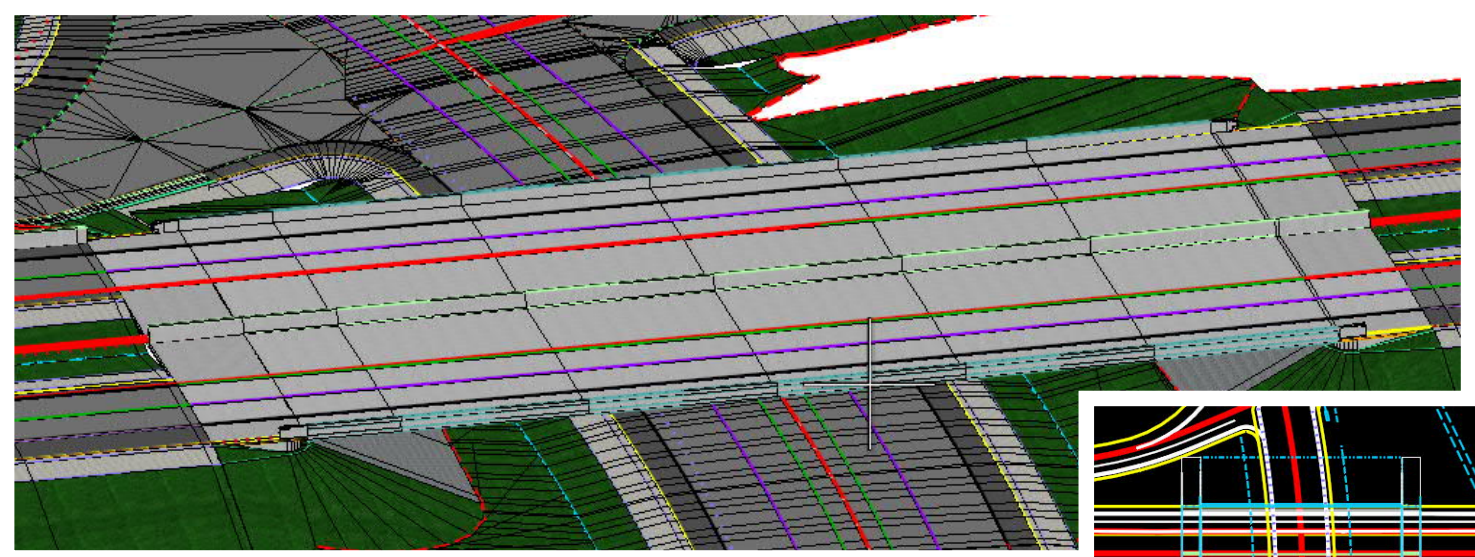

- Consistency across the 4 Regions

WHAT does CONNECT mean?

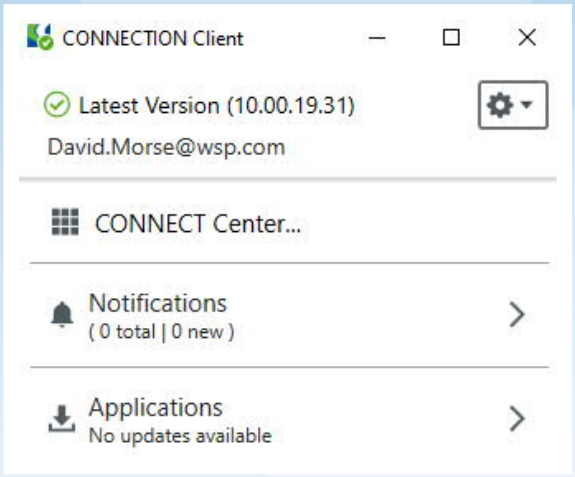

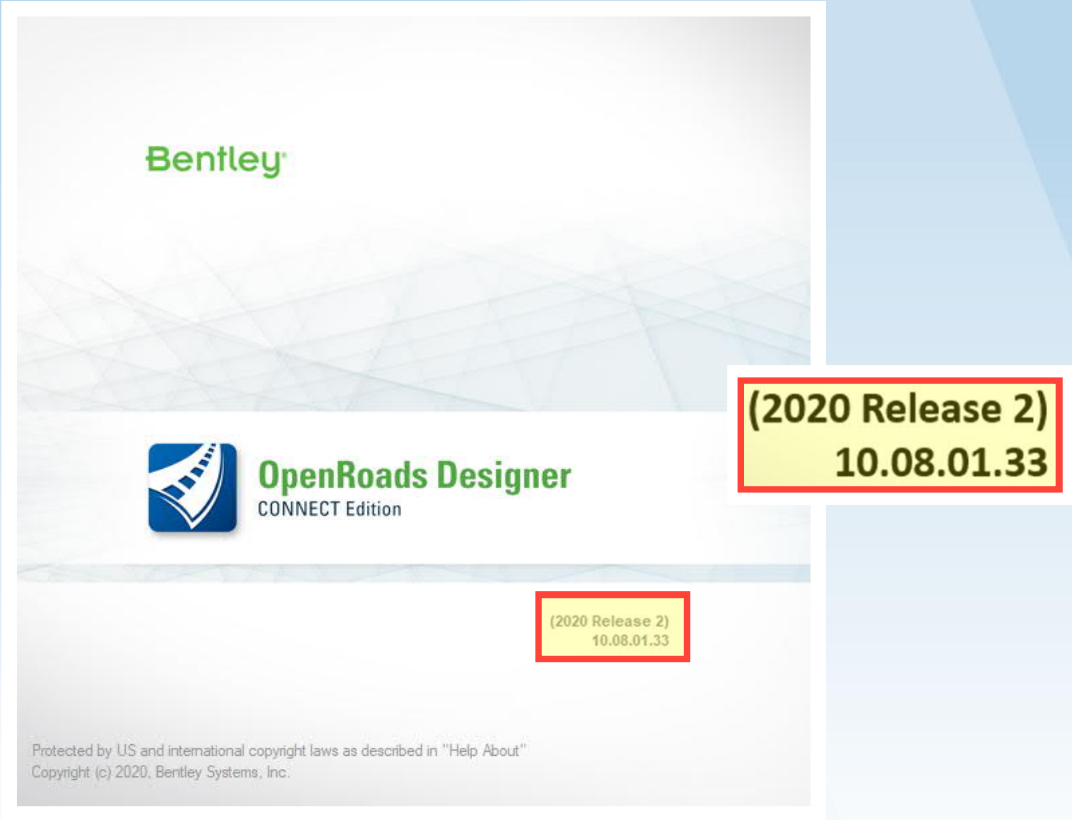

WHAT is Changing: Current vs. Future

Plan-Centric Design (SS2)

- All design intelligence is in external files
- There is no design intent
- Everything is 2D
- Nothing updates dynamically
- You must design and then draw
- Model is created from 2D geometry
- Geometry is based on plan sheet scale

Model-Centric Design (ORD)

- All design is now in the DGN – NO GPK or TIN files
- All geometry has design intent
- Everything is in 3D
- Hydraulic & Utility Modeling
- Changes update dynamically
- You design and the model draws most of your 2D geometry
- Geometry is true scale/true dimensions
- Focus is on the model/data and not on sheet production

WHAT is Changing: Cost/Risk Benefits

Changing the way we design allows us to work more collaboratively and effectively, which ultimately gives us the ability to affect cost and performance in a way that was not possible before.

BENEFITS:

- Improved communication of design intent
- Easier visualization for public outreach
- Better estimates
- Reduced change orders
- Faster project delivery

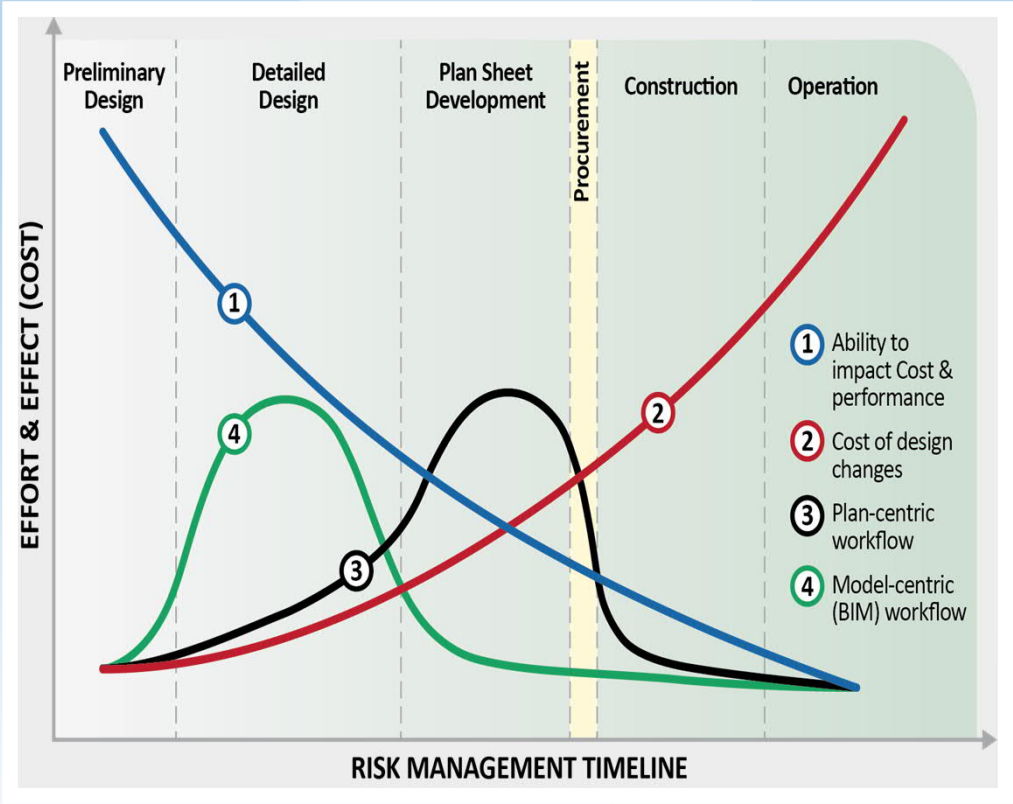

WSP adaptation of MacLeamy Curve

WHAT is Changing: New/Revised CADD Standards

- Reconfiguration of all DGNLIB's, cell libraries, plot and workspace configs
- New seed files for 2D and 3D geometry
- Introduction of Microstation Element Templates
- New level and color libraries
- D&C Manager being replaced with Feature Definition libraries
- New plan production processes – new seed files to support drawing and sheet models created from Named Boundaries
- TDOT pull down menu goes away
- Dynamic profile and cross section views
- COGO replaced with Civil Geometry
- New annotation groups and intelligent labeling options

WHAT is Changing: Workspace/Worksets

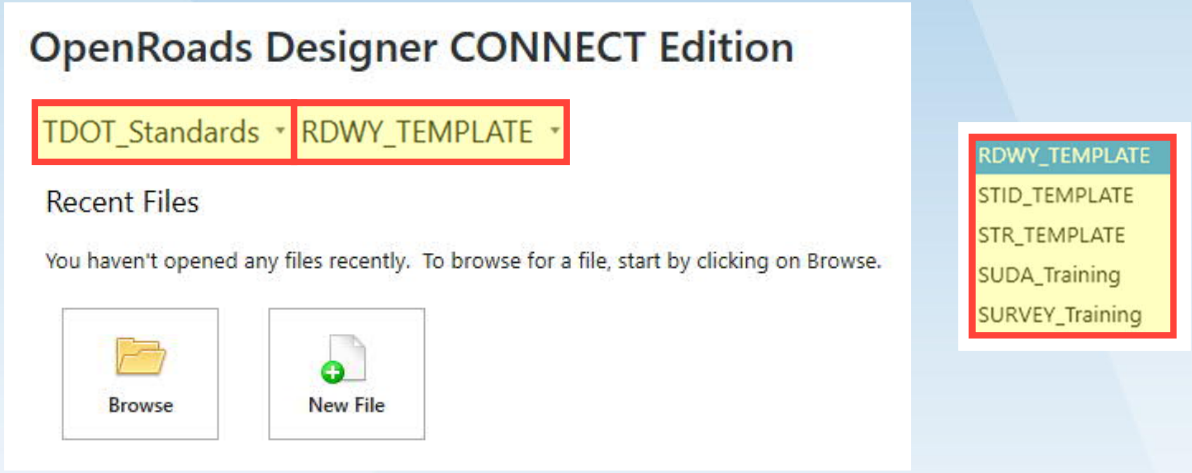

WHAT is Changing: Interface

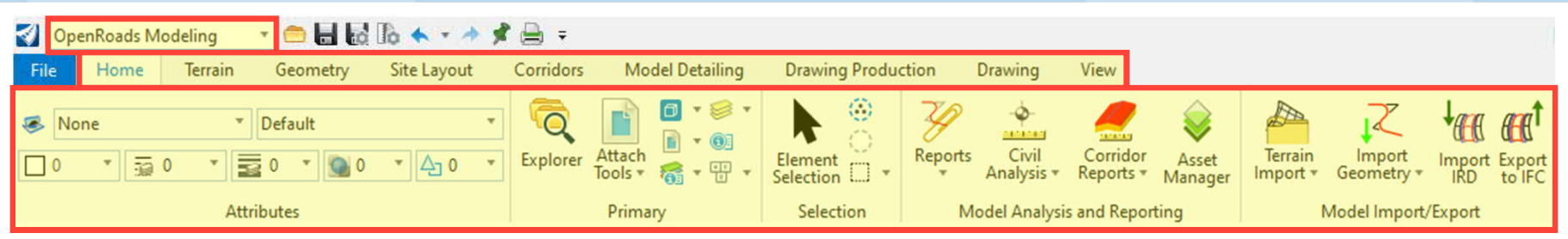

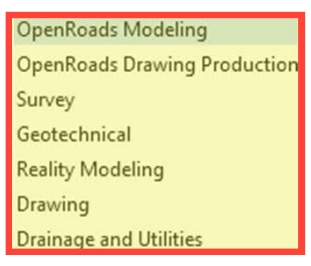

WHAT is Changing: Civil Templates (ITL)

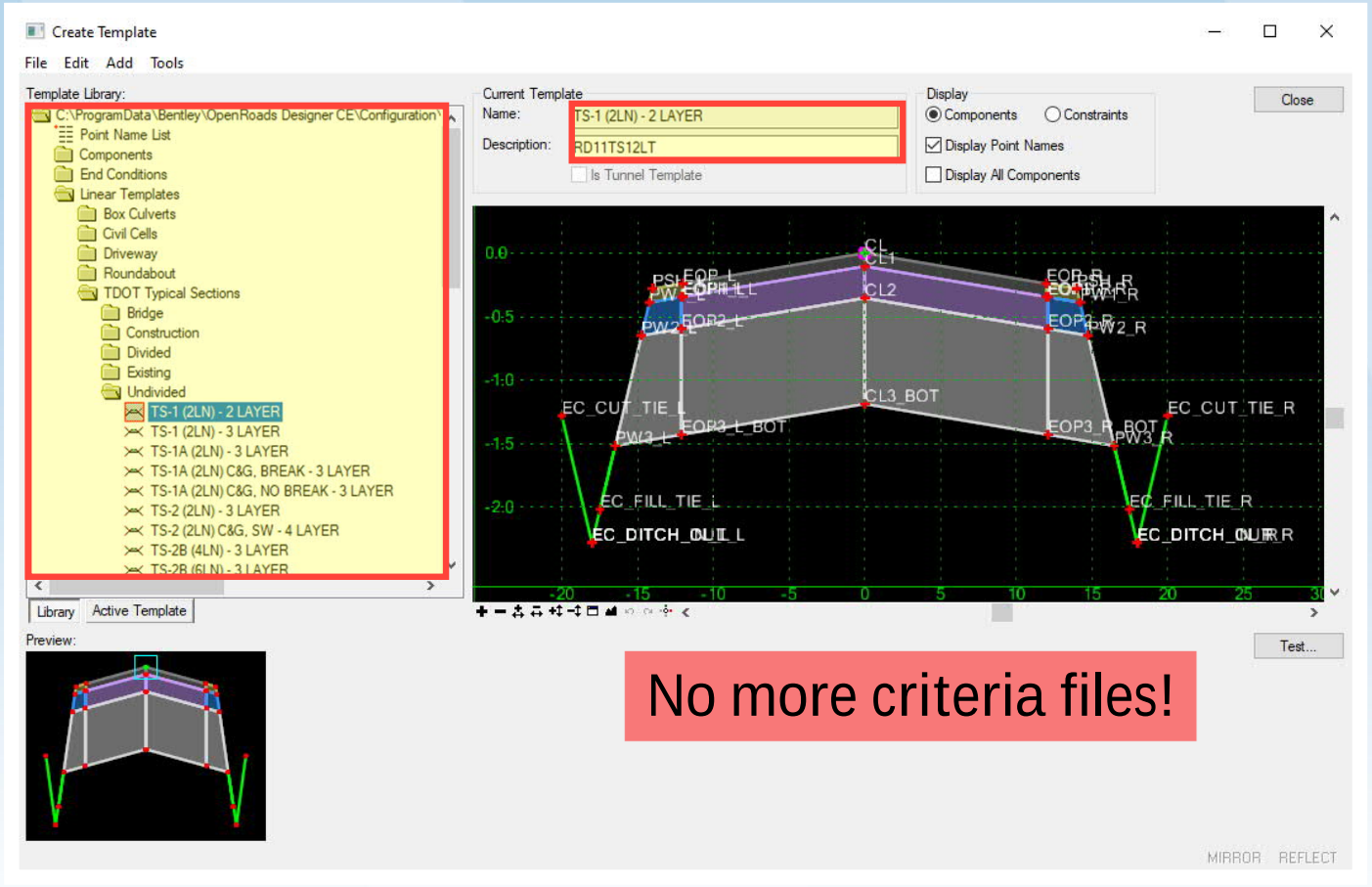

No more criteria files!

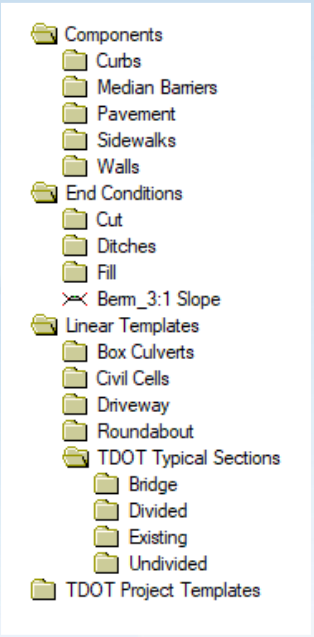

WHAT is Changing: 3D Linestyles

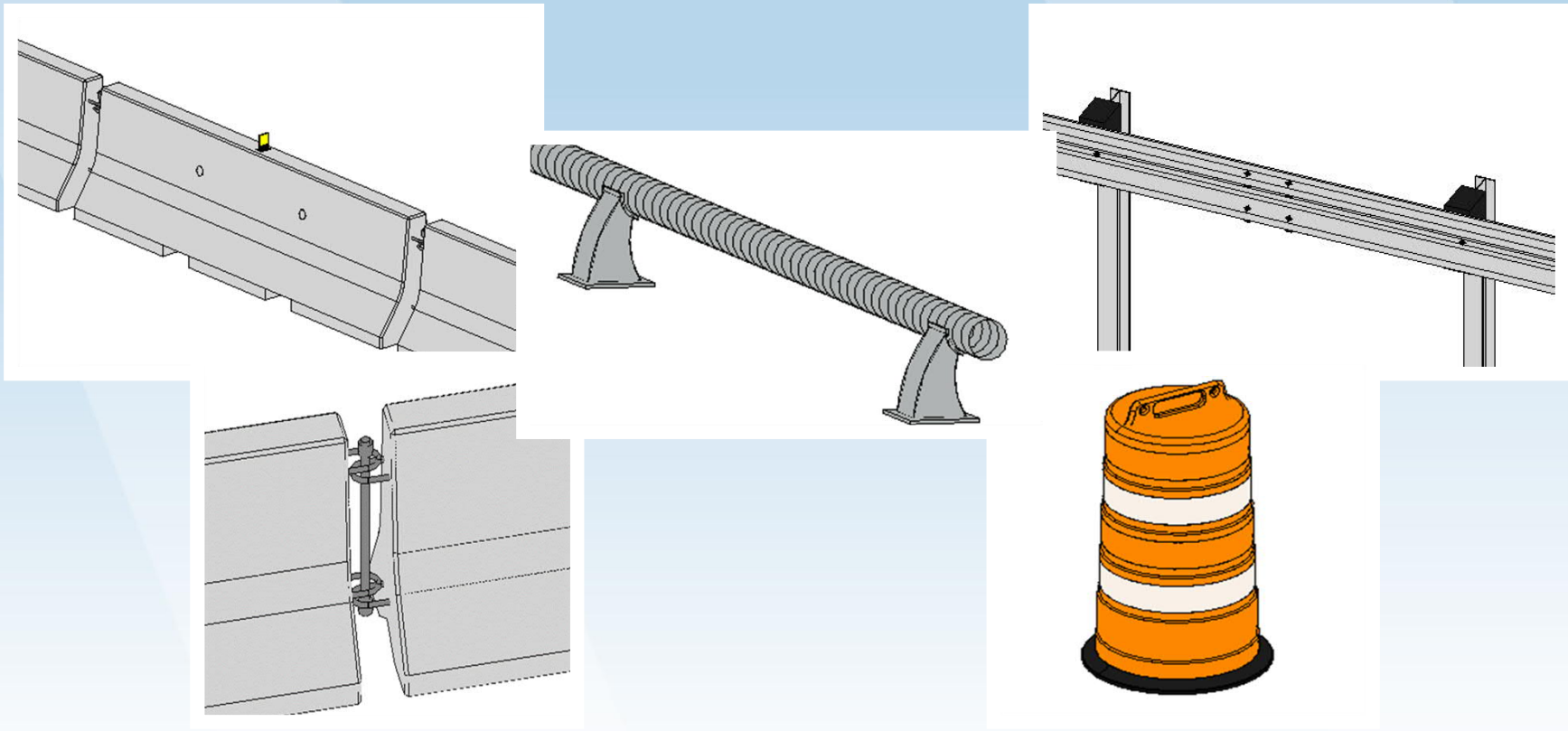

WHAT is Changing: 3D Cells

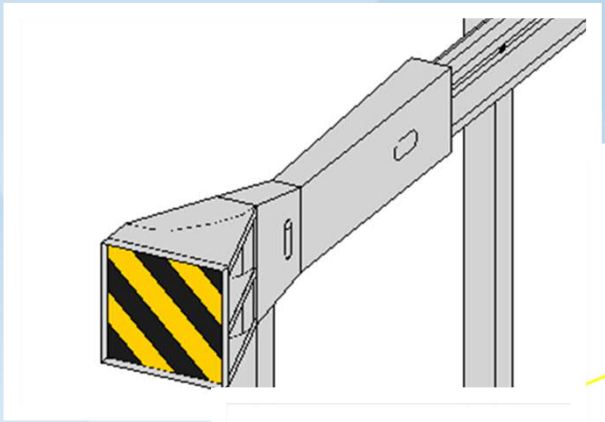

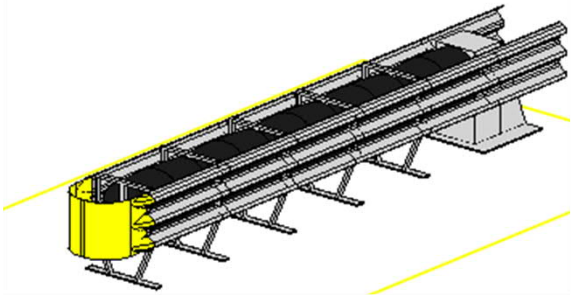

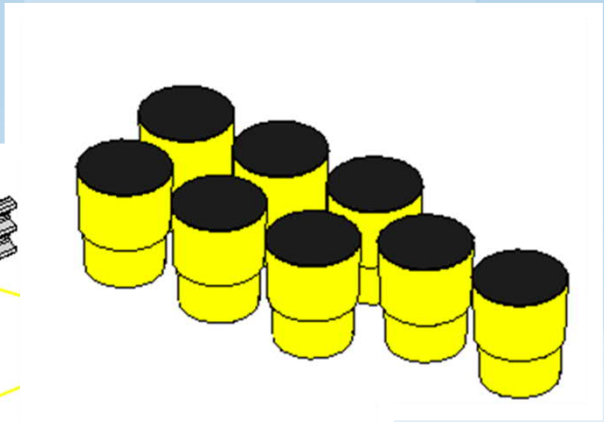

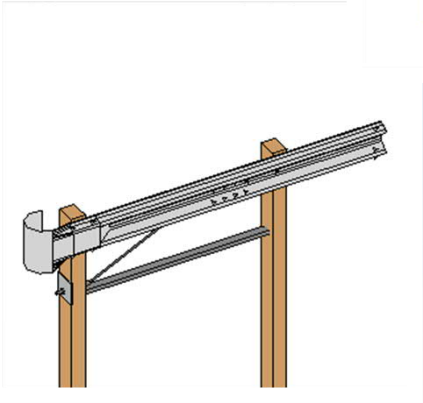

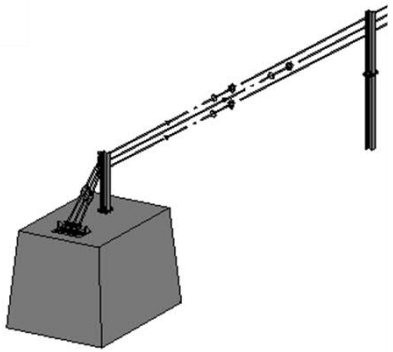

WHAT is Changing: 3D Cells

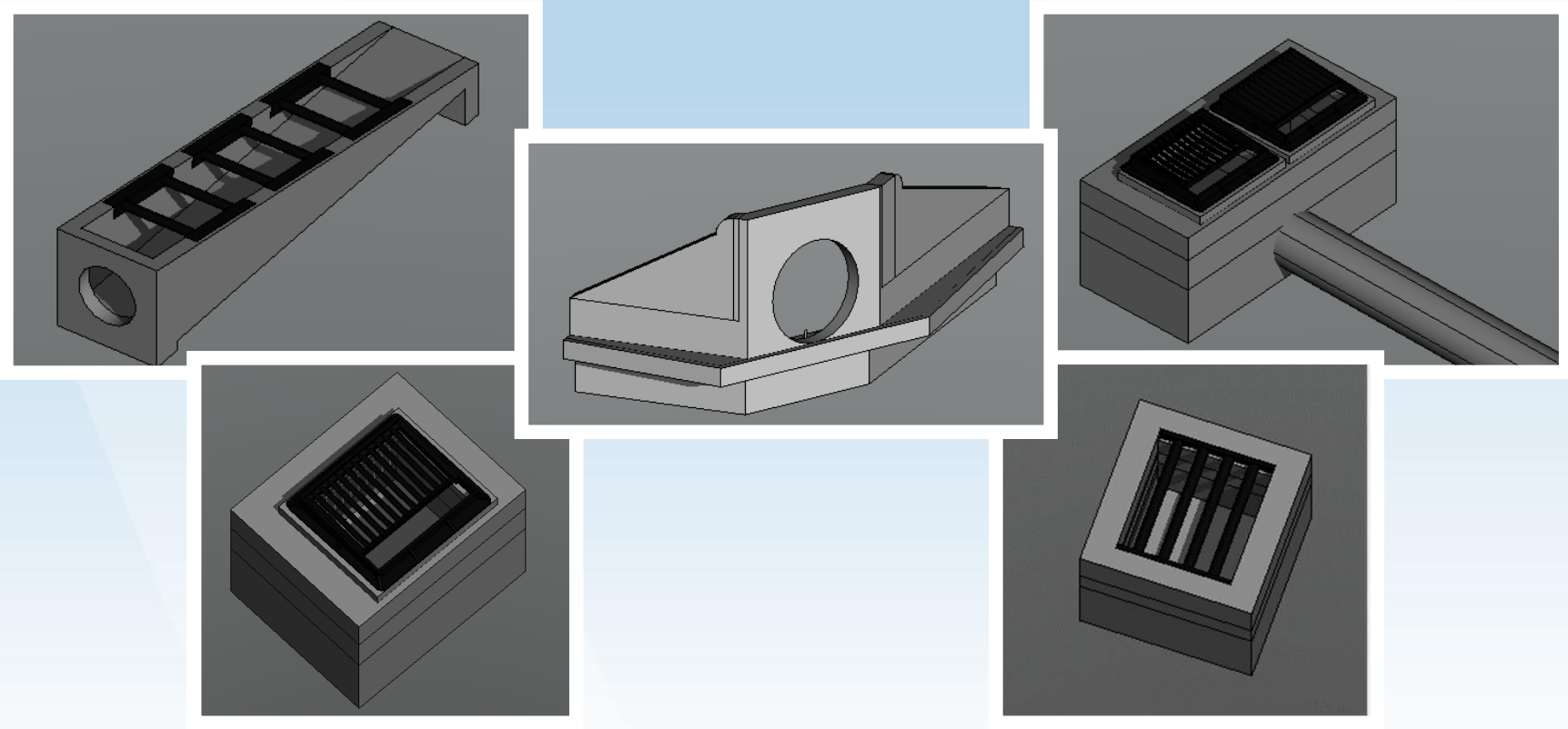

WHAT is Changing: Civil Cells

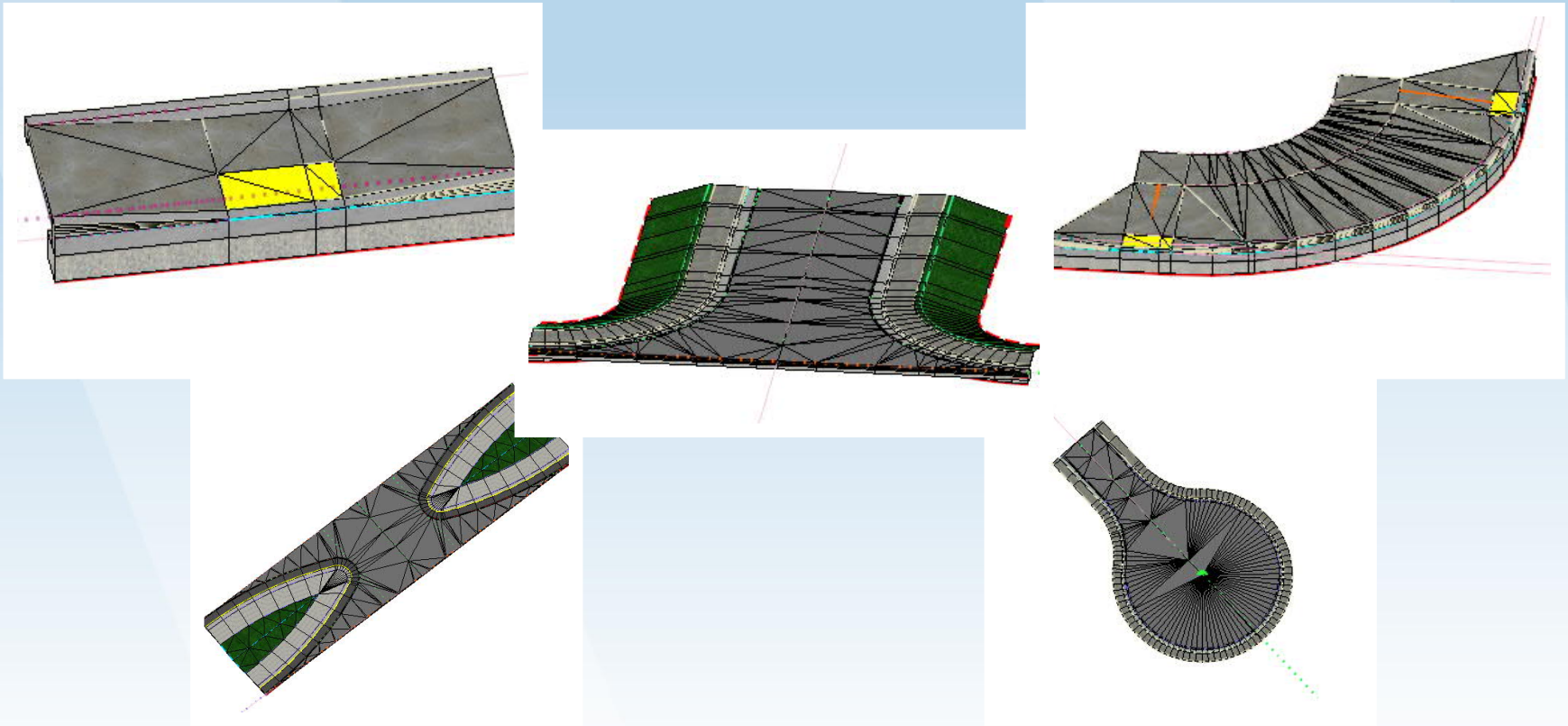

WHAT is Changing: Printing Process

- No more IPLOT Organizer; Printing done through the Sheet Index via Print Organizer within ORD

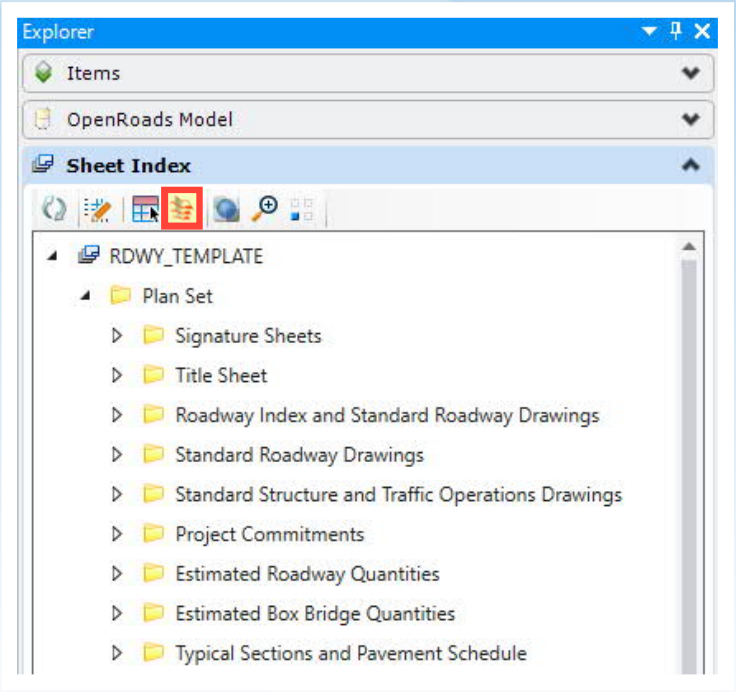

Future Deliverables: Sample Outputs

Visualization for Public Involvement

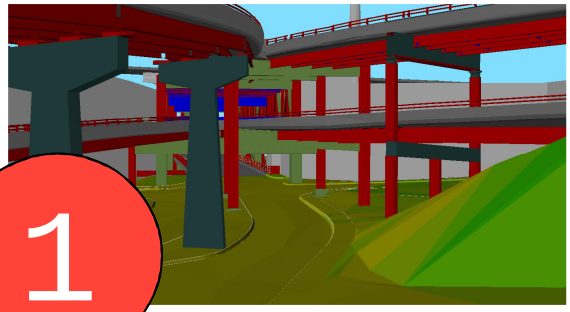

1

Signed and Sealed Plan Sheets (for now)

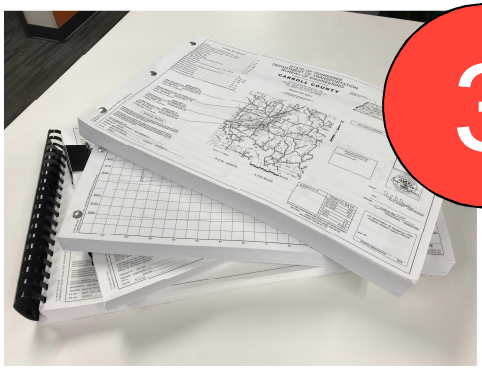

3

ORD Design Model

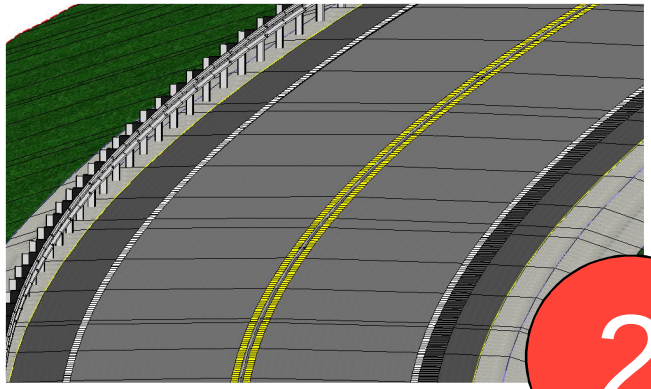

2

Digital Data for AMG (grading & paving)

4

Future Deliverables: Sample File Content and Formats

Purpose and Need of 3D Model	Final Deliverable	File Format
AMG – Grading	• Digital terrain surface depicting either the proposed finished grade or subgrade (top of dirt) for the roadway traveled way and side slope conditions. • 2D line work showing all lane lines or grade breaks. • Survey control files.	DGN and/or LandXML
AMG – Paving	• Alignments and survey control files. • 3D line strings for all lane lines or grade breaks.	DGN and/or LandXML
Constructability Reviews	• ORD design models.	DGN
Survey Layout	• Alignments, profiles, 3D line strings, and survey control files.	DGN and/or LandXML
Quantity Take-offs	• Alignments, surfaces, and 2D/3D line work. • ORD design model.	DGN and/or LandXML

Training Materials

- Manuals
  - Fundamentals
  - Survey
  - Roadway Design I
  - SUDA (Subsurface Utility Design & Analysis)
  - Roadway Design II
  - Construction
- Instructional Videos

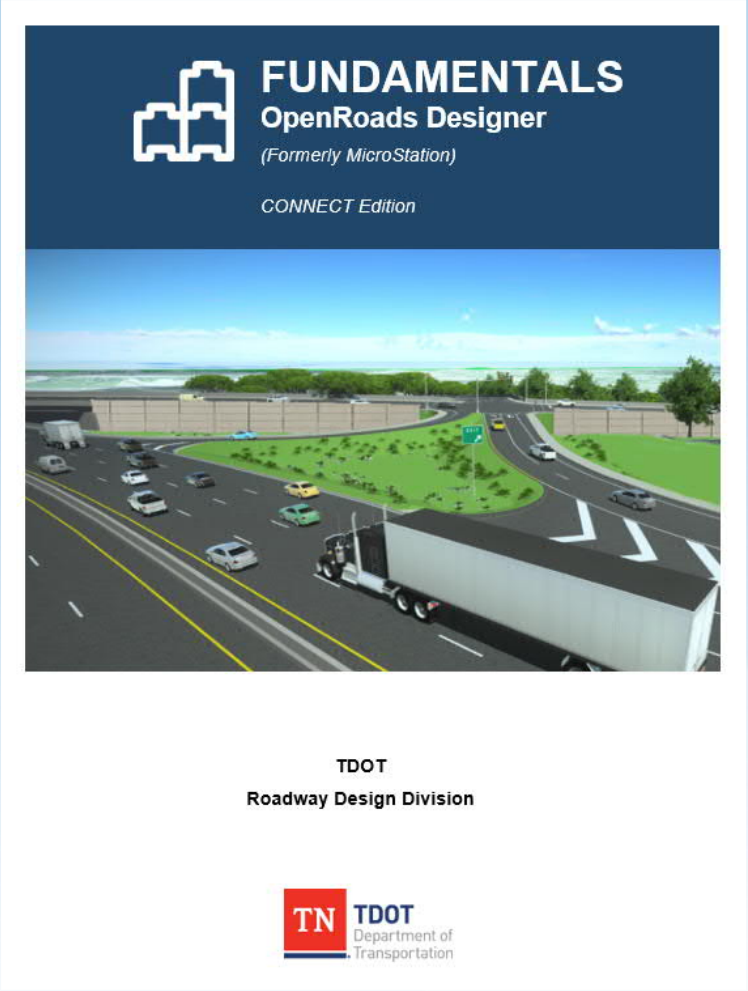

Bentley Licensing

- SS2 Licensing via SELECTServer – ends Dec 31, 2020
- SS10 – ends Dec 31, 2021
- TDOT
  - SS2 (not upgrading to SS10 at this time)
- Consultants (2 OPTIONS)
  - SS2 Node Locked License (individual)
  - Upgrade to SS10
    - Bentley: If you are using traditional workflows using Geopak criteria (for cross-sections), there are no issues with SS10.
    - Additional testing in progress.

Implementation Timeline

- Interim ORD workspace released to consultants:
  - 2/21/20
- Next anticipated TDOT ORD workspace available for consultants:
  - DEC 2020
- Consultant requirement to start projects in ORD (survey):
  - Likely SPRING 2021
- ORD Project Submittals – project based
  - Timeframe TBD

Existing Projects: SS2 or ORD?

- What is the project TIMELINE?
- What is the project COMPLEXITY?
- How much effort has been put into PLAN SHEET & CROSS SECTION development?
- What are the CONTRACTUAL requirements?
- What is the designers EXPERIENCE with ORD?

TDOT ORD Website/Support

- TDOT ORD website: https://www.tn.gov/tdot/roadway-design/tdot-cadd-support/tdot-openroads-designer.html

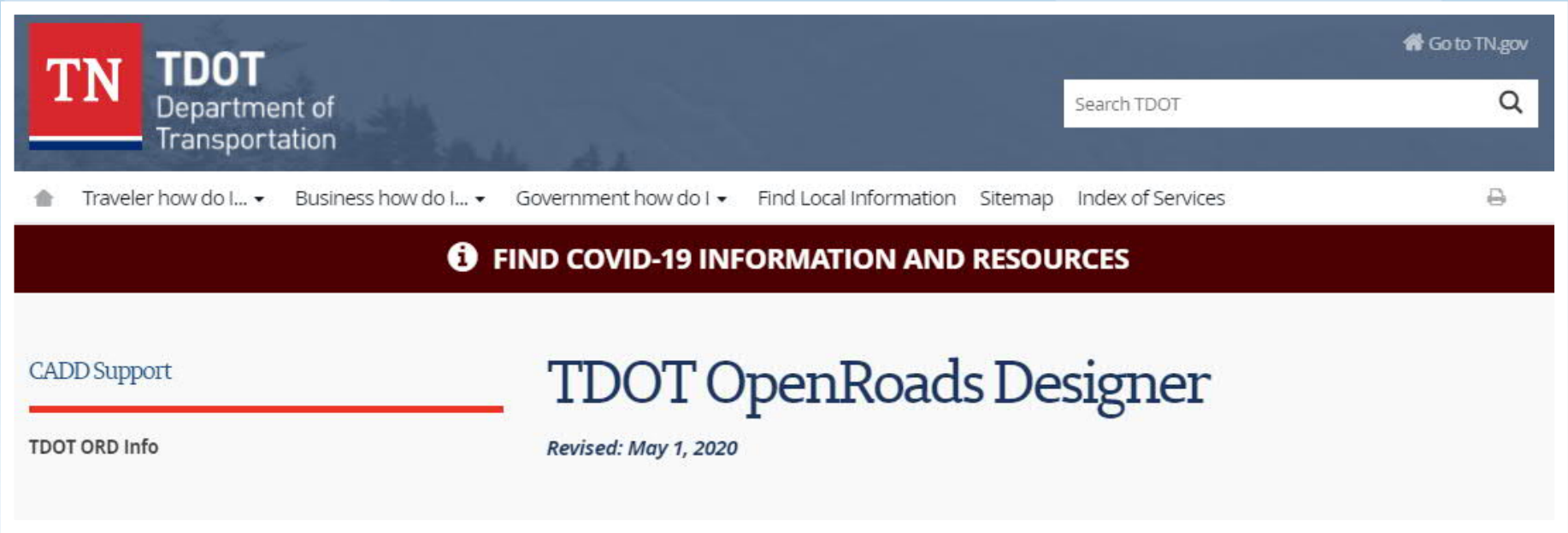

- TDOT CADD Support (ORD) Email: TDOT.ORD@tn.gov

Questions

David Morse, PE - WSP
David.morse@wsp.com
615-340-9194

Jennifer Lloyd, PE - TDOT